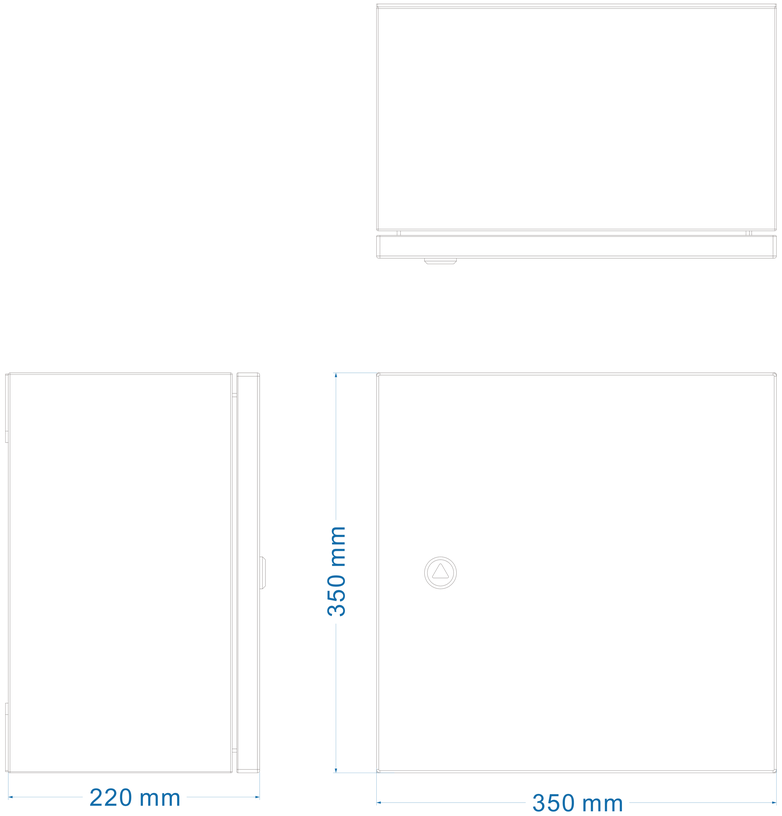

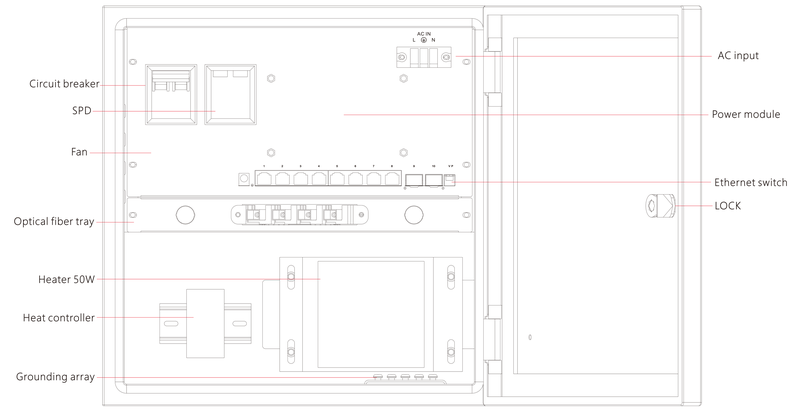

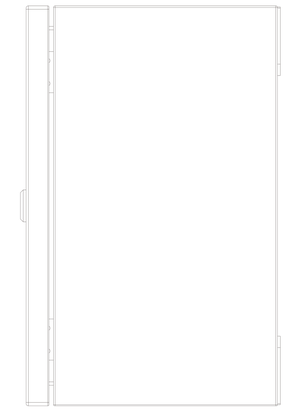

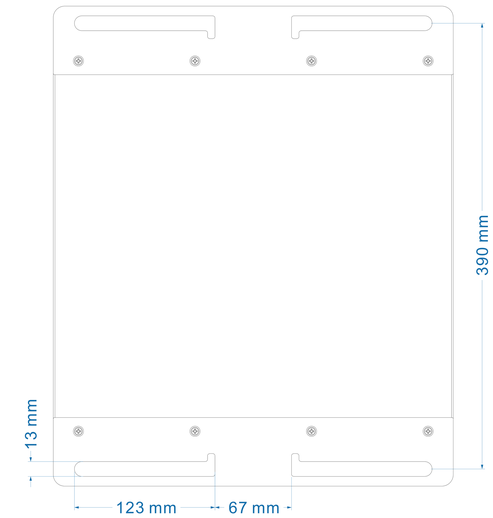

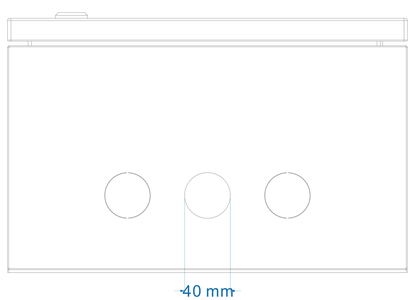

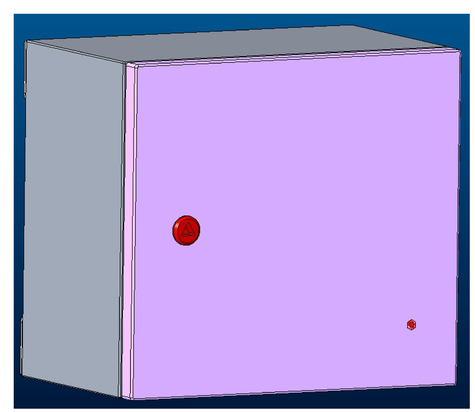

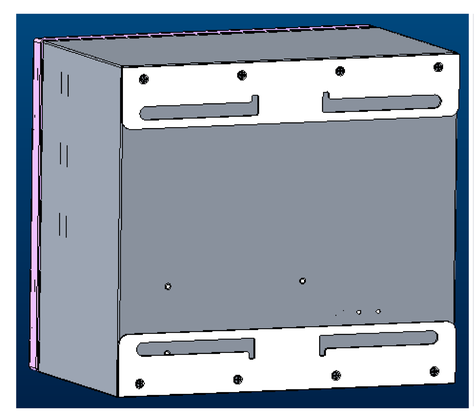

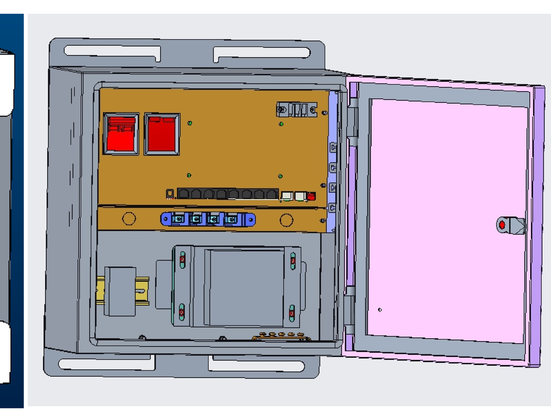

Box colour:white

Silk screen color: Black